PUSHBUTTON CONTROL WIRING DIAGRAM

NOTES
1. PUSHBUTTONS SHALL HAVE PROTECTIVE SHROUDS.
2. OPEN PUSHBUTTON SHALL BE GREEN COLOR.
3. CLOSE PUSHBUTTON SHALL BE RED COLOR.
4. PROVIDE LOCKABLE ENCLOSURE FOR PUSHBUTTONS.

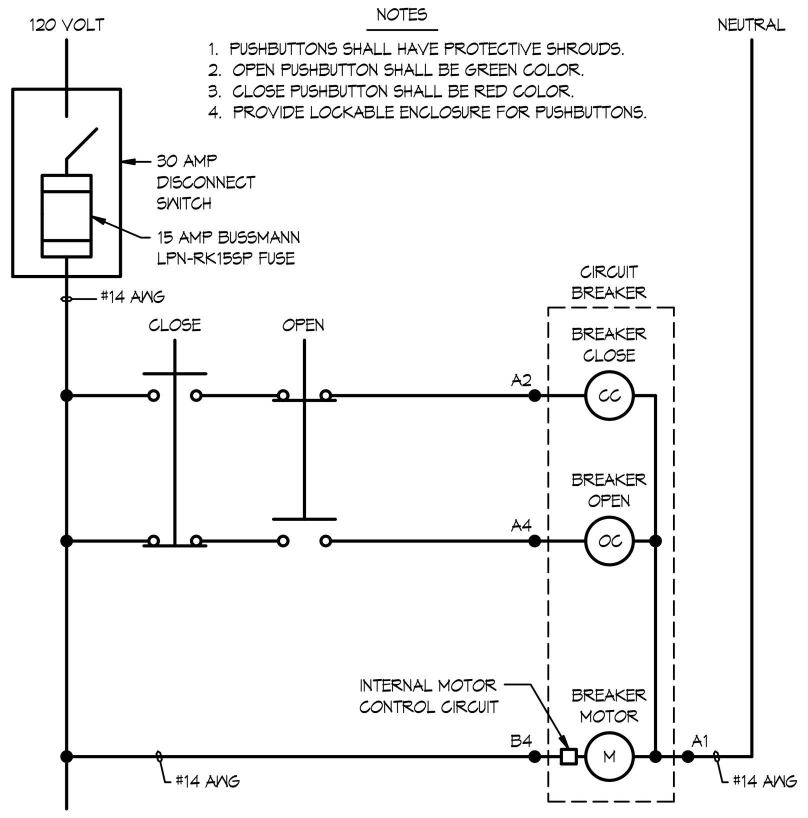

5 / E101 PUSHBUTTON CONTROL WIRING DIAGRAM
SCALE NOT TO SCALE

ENCLOSED PUSHBUTTON CONTROL DETAIL

NOTES
1. PUSHBUTTONS TO BE HEAVY DUTY 30.5 mm MOUNTED IN DIE-CAST ZINC BOX WITH 3/4" NPT CONDUIT ENTRANCE.
2. PUSHBUTTON MODULE (SEE NOTE 1) TO BE MOUNTED IN THE BACK OF A 8" X 10" X 6" DEEP NEMA 3R ENCLOSURE.
3. INSTALL ENGRAVED NAMEPLATE AS SHOWN IN SCHEDULE FOR PUSHBUTTONS AND ON ENCLOSURE AT LOCATION INDICATED. NAMEPLATE TO BE 1/8" (MIN.) BLACK LETTERS ON WHITE BACKGROUND.

NAMEPLATE SCHEDULE	
LOCATION ON PANEL	NAMEPLATE MESSAGE
①	BUILDING MAIN CIRCUIT BREAKER REMOTE OPERATION PUSHBUTTON STATION
②	OPEN
③	CLOSE

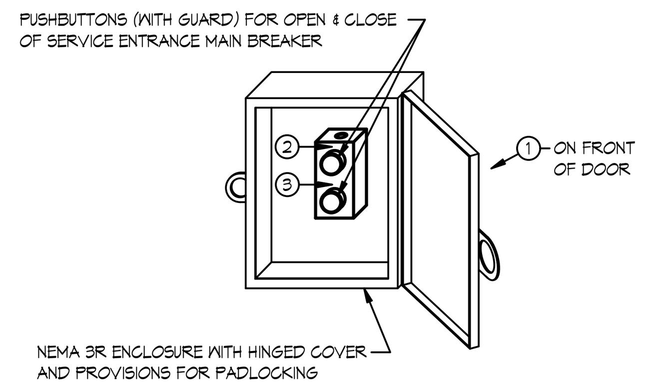

4 / E101 ENCLOSED PUSHBUTTON CONTROL DETAIL
SCALE NOT TO SCALE

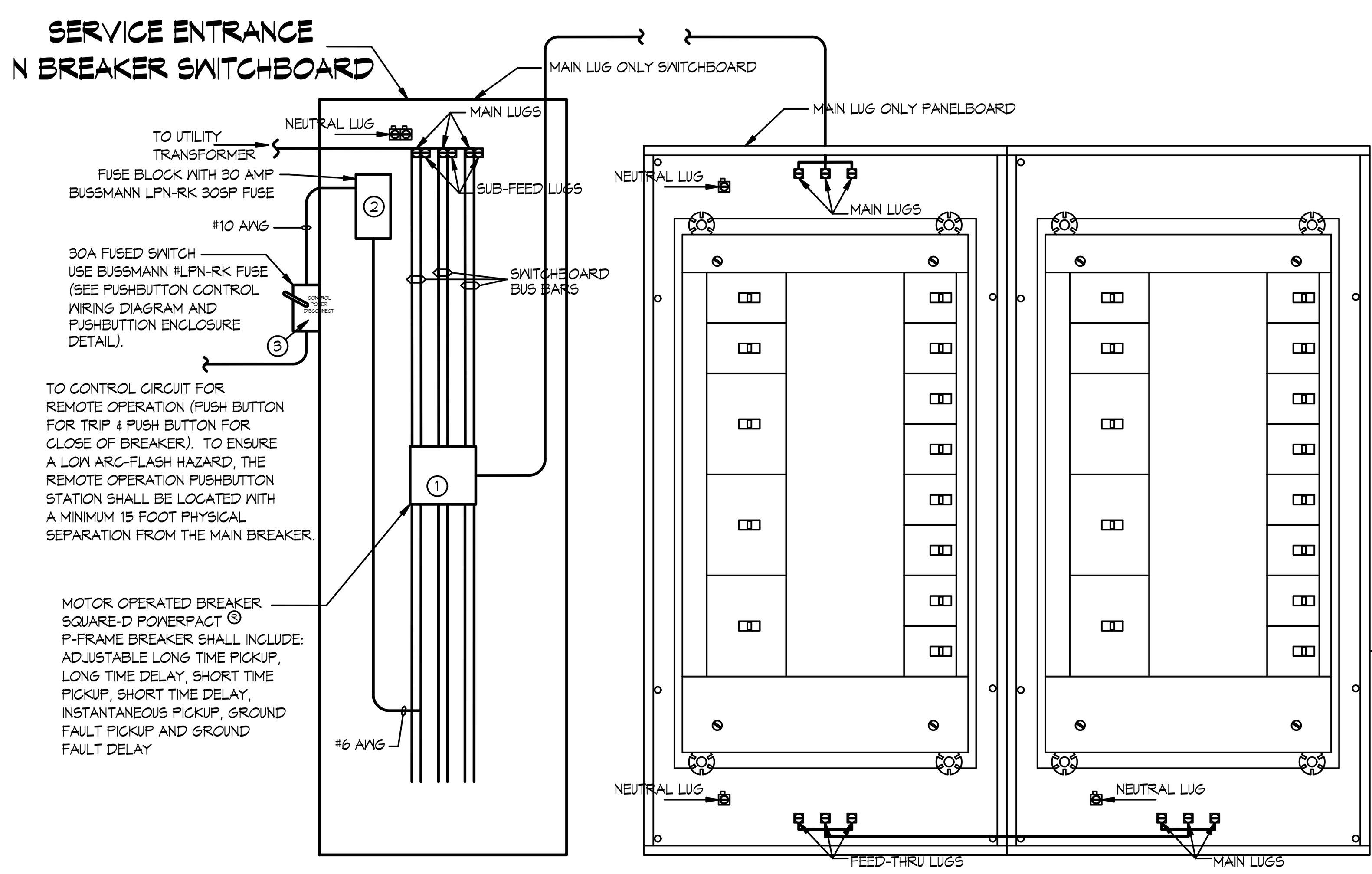

3 / E101 SERVICE ENTRANCE DETAIL 1200 AMP MAXIMUM - 208 VOLT
SCALE NOT TO SCALE

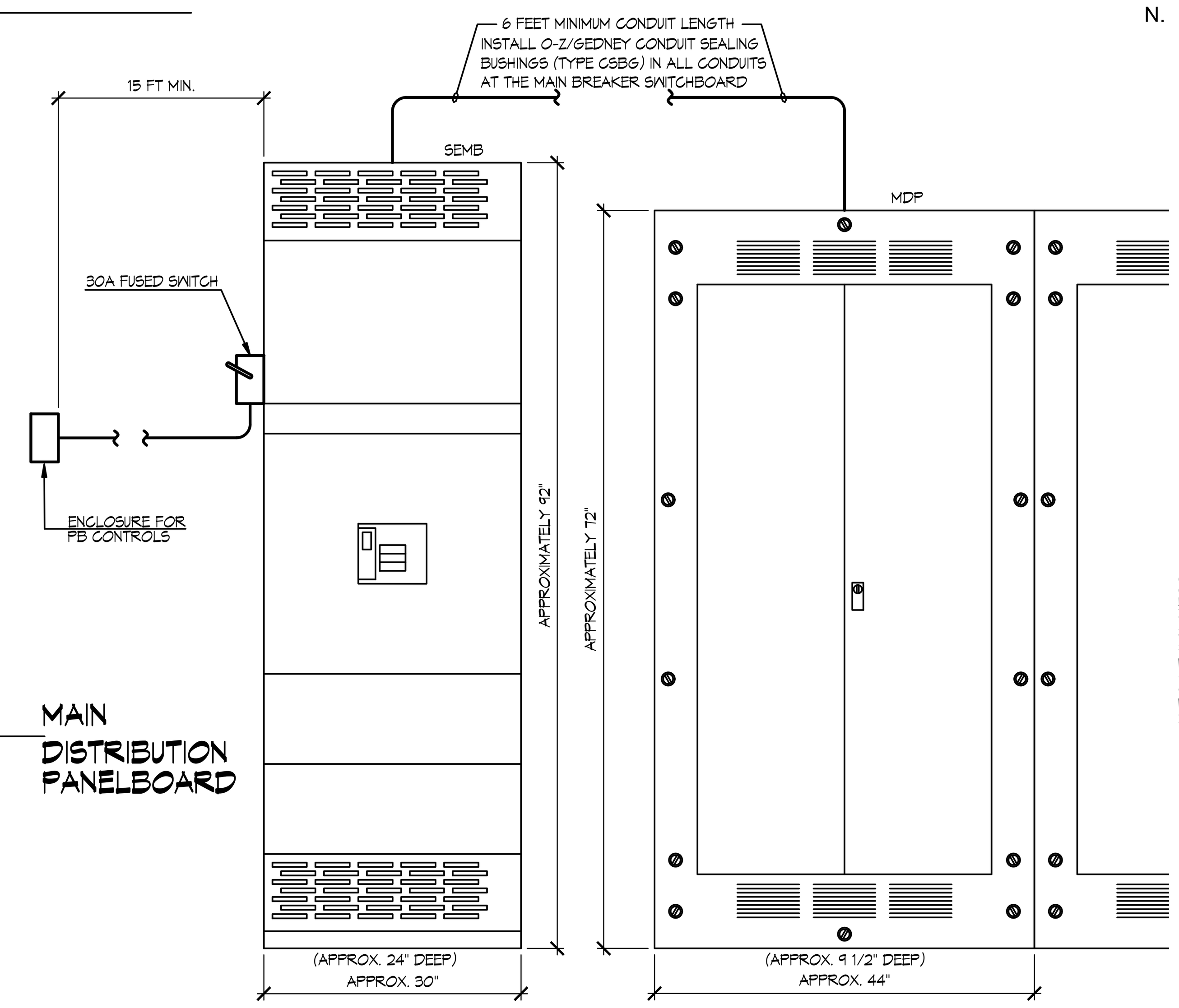

2 / E101 SERVICE ENTRANCE ELEVATION 1200 AMP MAXIMUM - 208 VOLT
SCALE NOT TO SCALE

GENERAL ELECTRICAL NOTES

1. GENERAL
   - A. EXISTING CIRCUITS AND EQUIPMENT LOCATIONS ARE FROM CASUAL OBSERVATIONS AND EXISTING DOCUMENTATION AND SHALL BE FIELD VERIFIED BY CONTRACTOR. REPORT ANY AND ALL DISCREPANCIES TO ENGINEER PRIOR TO PROCEEDING.
   - B. ALL MATERIAL INSTALLED UNDER THIS PROJECT SHALL BE FURNISHED BY THE CONTRACTOR UNLESS OTHERWISE NOTED.
   - C. COORDINATE ALL POWER OUTAGES WITH THE OWNER'S REPRESENTATIVE.
   - D. PROVIDE PERMANENT LABELS FOR PANELBOARDS, FUSED SWITCHES, MOTOR STARTERS, AND LOCAL DISCONNECTS.
   - E. ALL FUSES SHALL BE CLASS R1 UNLESS OTHERWISE NOTED.
   - F. EACH CIRCUIT SHALL HAVE A DEDICATED NEUTRAL. SHARED NEUTRALS SHALL NOT BE USED UNLESS OTHERWISE NOTED.
   - G. ALL CONDUIT INSTALLED SHALL BE 3/4" OR LARGER UNLESS OTHERWISE NOTED.
   - H. ALL RACEWAY SHALL BE CONCEALED AND ALL WALL MOUNTED DEVICE BOXES (FOR RECEPTACLES, SWITCHES, TELEPHONE, AND DATA) SHALL BE FLUSH MOUNTED UNLESS OTHERWISE NOTED.
   - J. ALL CONDUCTORS, WIRE, AND CABLE SHALL BE INSTALLED IN A RACEWAY SYSTEM. ONLY LOW VOLTAGE CONTROL CABLE, FIRE ALARM CABLE AND DATA CABLE PLENUM RATED MAY BE RUN ABOVE CEILING WITHOUT RACEWAY.
   - K. CONTRACTOR SHALL INSTALL RACEWAY TO ALL POWER, DATA, AND TELEPHONE BOXES INSTALLED FOR FUTURE USE.
   - L. INSTALL PULL STRINGS IN ALL EMPTY CONDUITS INSTALLED UNDER THIS PROJECT.
   - M. CONTRACTOR SHALL PROVIDE A TYPED CIRCUIT IDENTIFICATION CARD SHOWING ALL CIRCUIT ADDITIONS AND MODIFICATIONS FOR EACH PANELBOARD AFFECTED UNDER THIS PROJECT.
   - N. DATA/TELEPHONE AND LOW VOLTAGE CONDUCTORS SHALL NOT BE RUN IN THE SAME RACEWAY COMPARTMENT WITH POWER CIRCUITS.

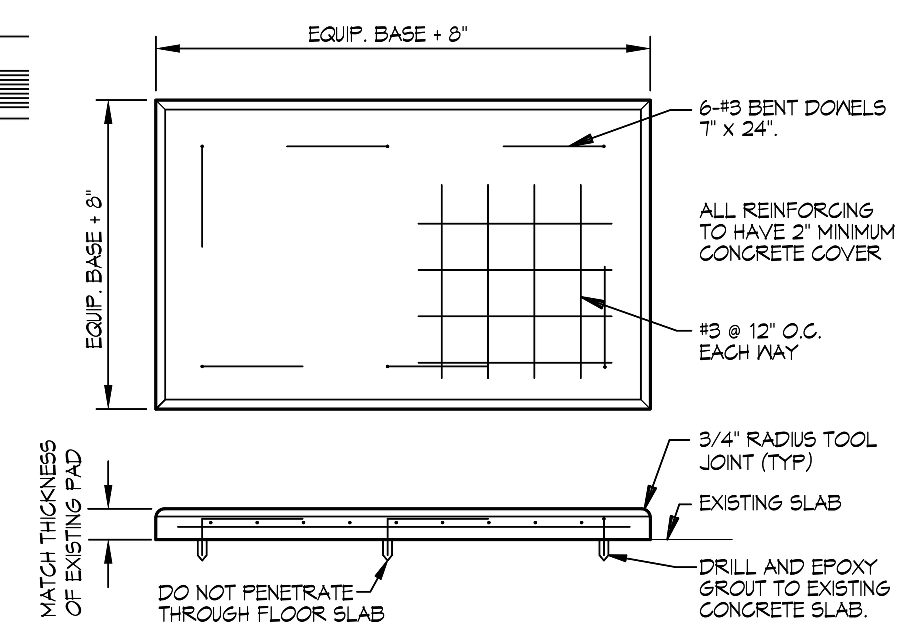

NOTE: CONCRETE TO BE 3000 PSI CHERT FREE PORTLAND CEMENT ASTM C150, TYPE I, COMPLYING WITH THE AMERICAN CONCRETE INSTITUTE (ACI) 301, "SPECIFICATIONS FOR STRUCTURAL CONCRETE FOR BUILDINGS."

1 / E101 HOUSEKEEPING PAD DETAIL
SCALE NOT TO SCALE

ELECTRICAL DEMOLITION NOTES

☐ INDICATES NOTES LOCATED ON PLAN

1. POWER:
   - A. REMOVE SWITCHGEAR (GP1), FEEDER CONDUCTORS AND CONDUIT BACK TO PANEL. REMOVE BRANCH CIRCUIT CONDUCTORS BACK TO NEAREST JUNCTION, RETAIN CIRCUITS FOR REUSE AND RELOCATION IN NEW DISTRIBUTION PANEL(S).
   - B. REMOVE MAIN PANEL (MP), SERVICE FEEDER CONDUCTORS BACK TO NEAREST JUNCTION. REMOVE BRANCH CIRCUIT CONDUCTORS BACK TO NEAREST JUNCTION, RETAIN CIRCUITS FOR REUSE AND RELOCATION IN NEW DISTRIBUTION PANEL(S).
   - C. REMOVE ELECTRICAL PANEL GL3, FEEDER CONDUCTORS AND CONDUIT BACK TO PANEL. REMOVE BRANCH CIRCUIT CONDUCTORS BACK TO NEAREST JUNCTION, RETAIN CIRCUITS FOR REUSE IN NEW PANEL GL3).
   - D. REMOVE SERVICE ENTRANCE FEEDER CONDUIT BACK FOR REROUTING TO NEW SERVICE ENTRANCE LOCATION.
2. MISCELLANEOUS:
   - A. REMOVE PLYWOOD, CONDUCTOR(S), BOX(ES), PNEUMATIC LINE(S) AND CONDUIT(S) BACK TO NEAREST JUNCTION.

ELECTRICAL RENOVATION NOTES

⬡ INDICATES NOTES LOCATED ON PLAN

1. POWER:
   - A. INSTALL SERVICE ENTRANCE ENCLOSURE AT LOCATION SHOWN ON NEW HOUSEKEEPING PAD. SERVICE ENTRANCE INCLUDES SERVICE ENTRANCE 208Y/120V, 1200 AMP MAIN BREAKER WITH ARC ENERGY-REDUCING MAINTENANCE SWITCH PER NEC ARTICLE 240.87, SEPARATE ENCLOSURE AND MOTOR OPERATED BREAKER WITH REMOTE PUSH BUTTON CONTROL. NEW HOUSEKEEPING PAD SHALL BE INSTALLED ACCORDING TO DETAIL 1/E101. ALLOW EIGHT INCHES (8") ON ALL SIDES OF SERVICE ENTRANCE ENCLOSURE. (A 24"X30" ENCLOSURE WOULD REQUIRE A 32"X38" PAD). INSTALL (2) MAIN FEED-THRU LUG 1200 AMP I-LINE DISTRIBUTION PANELS LABELED AS "MDP" INSTALLED ON EXISTING HOUSEKEEPING PAD VACATED BY SWITCHGEAR (GP1). SEE SERVICE ENTRANCE AND PUSH BUTTON DETAILS 2/E101, 3/E101, 4/E101, 5/E101 AND PANEL SCHEDULE FOR DETAILED INSTALLATION.
   - B. EXTEND CONDUIT AND INSTALL SALVAGED SERVICE ENTRANCE FEEDER CONDUCTORS FROM NEAREST JUNCTION TO NEW SERVICE ENTRANCE PANEL. (FIELD VERIFY EXISTING FEEDER SIZES AND NOTIFY ENGINEER IF DIFFERENT THAN WHAT IS INDICATED).
   - C. INSTALL NEW PANEL "GL4" AT SALVAGED LOCATION SHOWN. INSTALL AIC RATING NAMEPLATE (SEE PANELBOARD SCHEDULE) ON FACE OF PANEL. FURNISH AND INSTALL BREAKERS FOR EXISTING BRANCH CIRCUITS AND/OR FEEDERS THAT ARE EXISTING TO REMAIN, AND PROVIDE BREAKERS FOR BRANCH CIRCUITS AND/OR FEEDERS LESS THAN 100 AMPS RELOCATED FROM EXISTING PANELBOARDS "MP" AND "GP1".
   - D. INSTALL NEW FEEDER (4) #1 AWG CONDUCTORS WITH (1) #6 AWG GROUND AND 1-1/2" EMT CONDUIT FROM NEW MDP TO EXISTING PANEL EX1, SIMILAR TO SHOWN.
2. MISCELLANEOUS:
   - A. INSTALL PLYWOOD AND RE-INSTALL ACTIVE UNIVERSITY OF MISSOURI ENERGY MANAGEMENT (EMO) CONTROLS AND WIRING ON PLYWOOD PER EMO INSTRUCTIONS.

ELECTRICAL SYMBOLS

- CKT# — PANEL - BREAKER NUMBER (IDENTIFICATION). BRANCH CIRCUIT CONCEALED IN CEILING OR WALL. ARROW(S) INDICATE HOMERUNS TO PANEL. ALL CONDUCTORS ARE NOTED IN PANEL SCHEDULE. (PHASE CONDUCTOR(S); NEUTRAL CCONDUCTOR(S); GROUND CONDUCTOR)
- POWER TRANSFORMER
- 208 VOLT SWITCHGEAR
- PANELBOARD - 208Y/120V - SURFACE/FLUSH
- DISCONNECT SWITCH, FUSED SWITCH (30 SWITCH RATING, 30 FUSE RATING)
- ELECTRIC MOTOR
- JUNCTION BOX
- DEMOLITION LINE WORK
- NEW CONSTRUCTION
- EXISTING LINE WORK
- OVERHEAD CONDUIT NEW
- OVERHEAD CONDUIT EXISTING
- METASYS PANEL

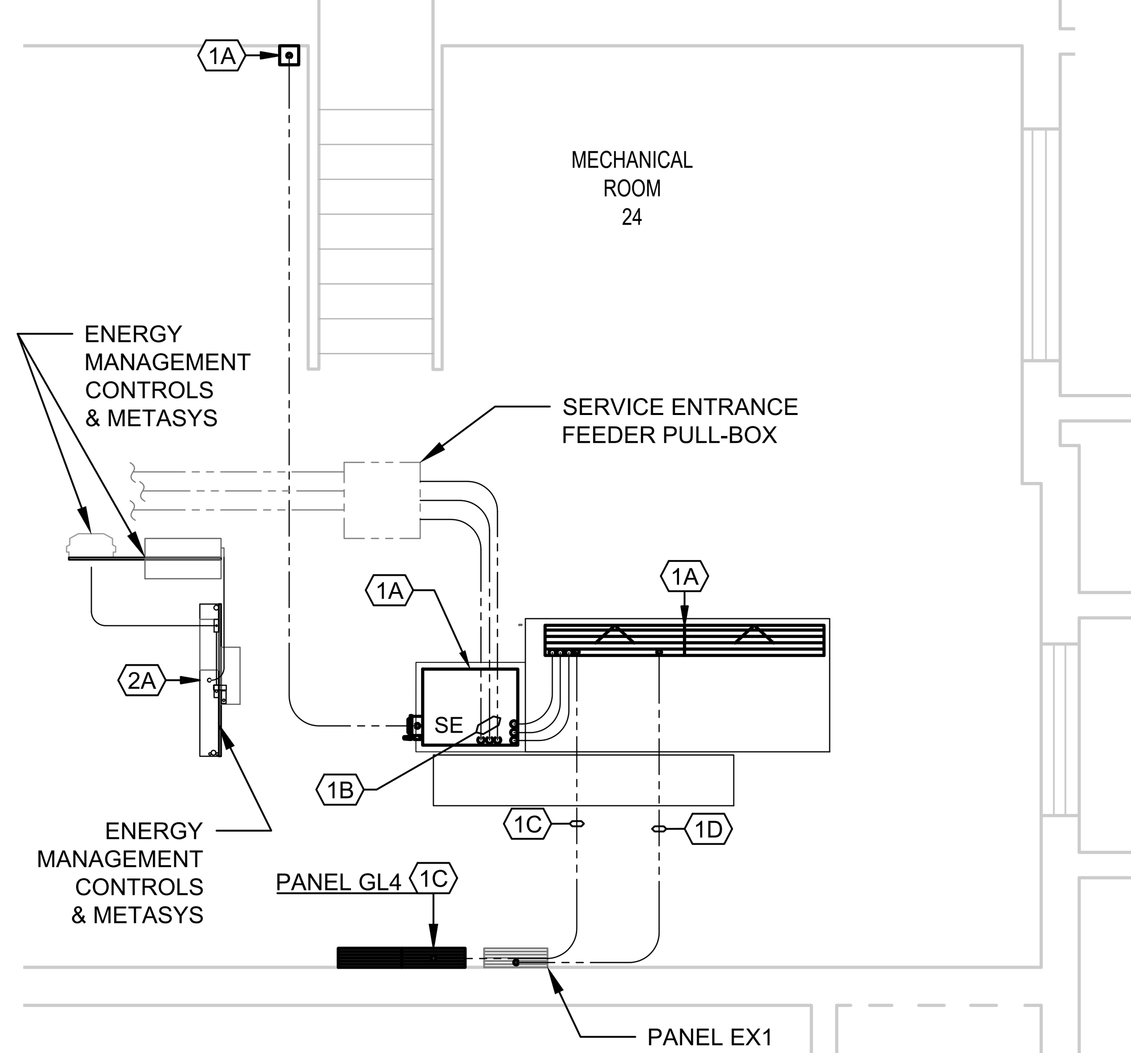

ELECTRICAL RENOVATION PLAN
SCALE: 1/4" = 1'-0"

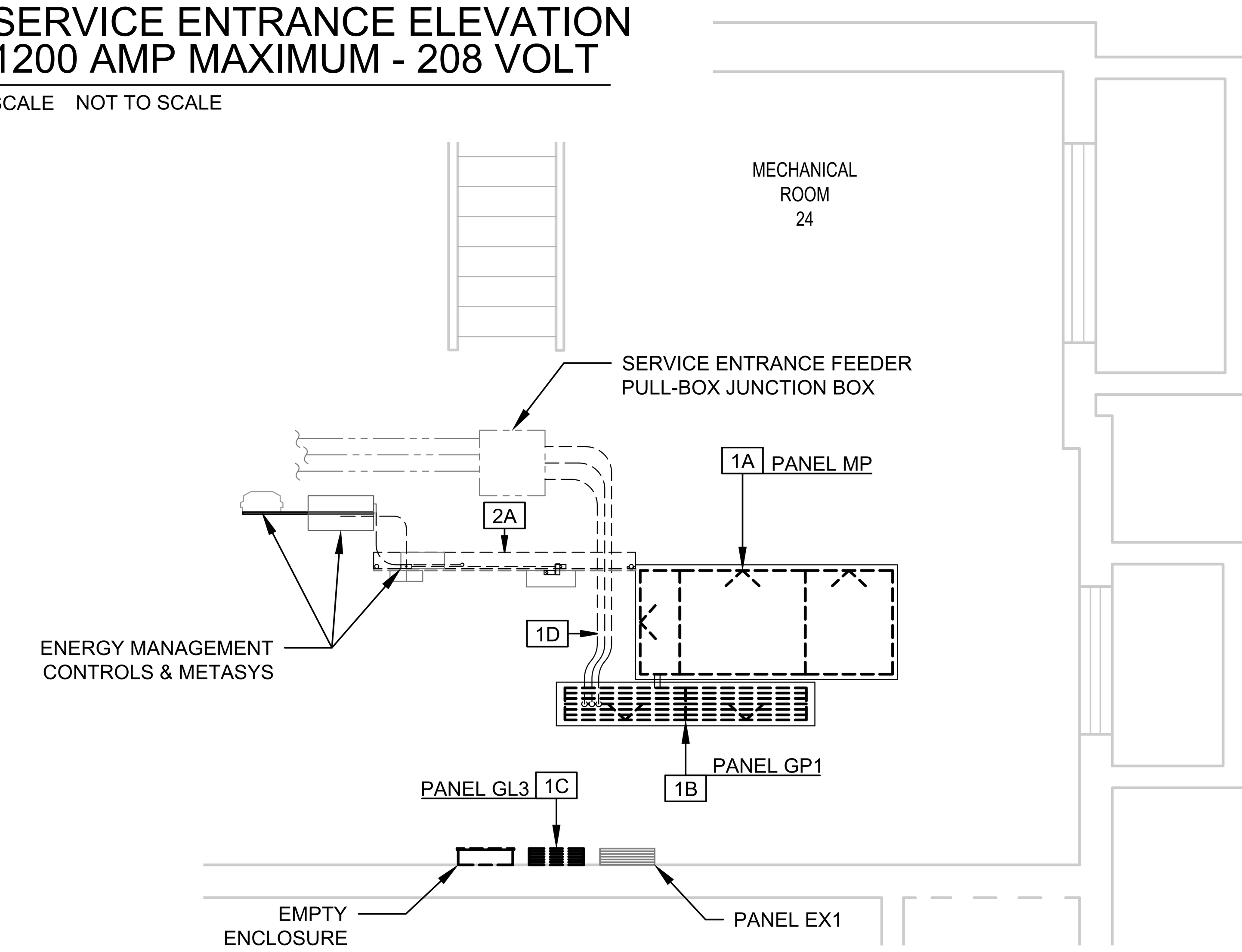

ELECTRICAL DEMOLITION PLAN
SCALE: 1/4" = 1'-0"

ABBREVIATIONS	
AWG	AMERICAN WIRE GAUGE
C	CONDUIT
CNTR/CNTRL	CONTROL
KVA	KILOVOLT-AMPS
PNL	PANEL
RM	ROOM
RPB	REMOTE PUSH BUTTON
TYP	TYPICAL

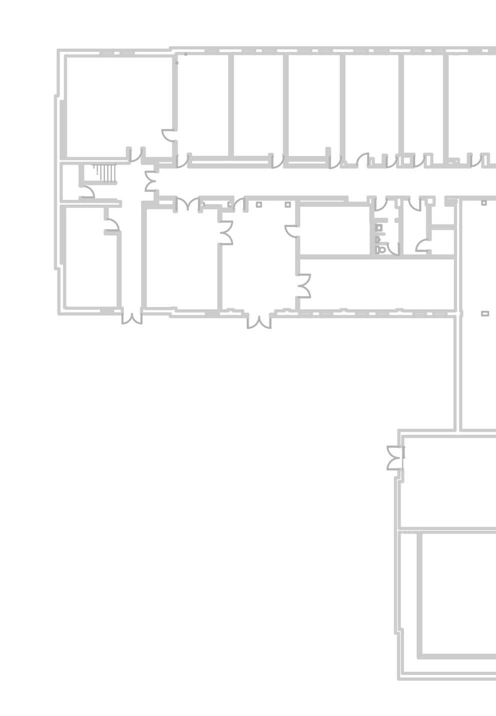

KEY PLAN
SCALE: 1" = 40'
HATCH INDICATES PROJECT AREA

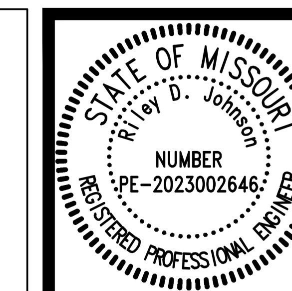

ENGINEER - RILEY D. JOHNSON
MO# PE-2023002646

Riley D. Johnson
Digitally signed by Riley D. Johnson
Date: 2024.03.08 14:33:54 -06'00'

The Professional Engineers seal and signature affixed to this sheet applies only to the material and information shown on this sheet. All drawings, instruments, or other documents not exhibiting this seal shall not be considered prepared by this engineer, and this engineer expressly disclaims any and all responsibility for such plans, drawings, or documents not exhibiting this seal.

This Document is intended to be signed digitally. If no digital signature is attached to this file, this media should not be considered a certified document.

03/12/24 ISSUED FOR CONSTRUCTION
DRAWN BY: JDR CHECKED BY: RDJ

CAMPUS FACILITIES
Planning, Design, & Construction
Design Services
UNIVERSITY OF MISSOURI

GEOLOGICAL SCIENCES
COLUMBIA, BOONE COUNTY, MISSOURI 65211
ELECTRICAL SERVICE PANEL REPLACEMENT
ELECTRICAL PLANS AND DETAILS

PROJECT NUMBER
CP241351

SHEET
E101